Hillmar
Hillmar Industries Ltd.
7371 Vantage Way
Delta, BC V4G 1C9
P:604 946-7115 F:604 946-0329
info@hillmar.com www.hillmar.com

THRUSTER DB MD16
TDB-MD16-LH-315-20-030-050-00365
THRUSTER DB
SLS & MKTG
ENGLISH

Sheet Number:	
Job Number:	
Form Number:	429-140-89651PT

Company / Project Reference:	Date.:	Page.:	Document Package No.:	Rev.:
		1 OF 1		

Inventor Drawing

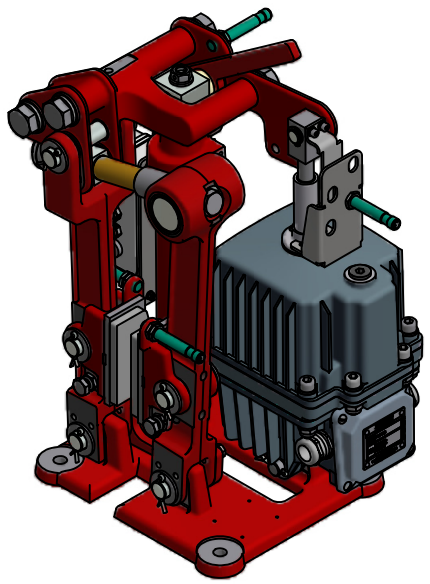

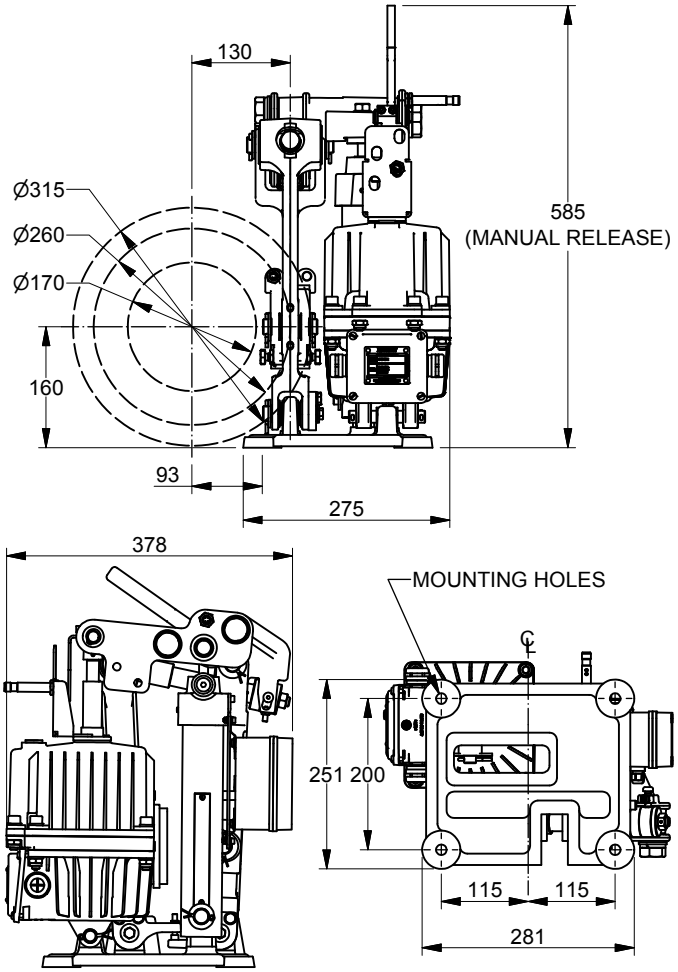

FEATURE	CODE
Thruster disc brake	TDB
Disc brake size	MD16-LH
Disc OD (mm)	315
Disc thickness (mm)	20
Thruster size	030
Thruster stroke (mm)	050
Braking capacity (Nm)	00365

Example for ordering	TDB-MD16-LH-315-20-030-050-00365

TECHNICAL DATA

Max. braking torque, μ=0.4 static (Nm)	365
Max. braking torque, μ=0.35 dynamic (Nm)	319
Maximum coupling hub diameter (mm)	170
Disc OD (mm)	315
Disc thickness (mm)	20
Max. contact force Fc (N)	3500
Temperature range (°C)	-20 to +70
Mounting holes	4 x Ø14
Mounting bolts	4 x M12
Pad area (each pad) (cm^2)	47.2
Maximum allowable pad wear (mm)	7
Weight of brake (no thruster) (kg)	29
Weight of brake (with thruster) (kg)	42
Standard painting color CARMINE RED	RAL #3002

NOMINAL SPECIFICATION

All brakes come standard with self centring mechanism, manual release mechanism, automatic adjuster, proximity switch to indicate break release.

Brakes are bulit to same handing as shown

NOTES

All figures are nominal figures only

All dimensions are in millimeters

C:\Vault_Workspace\Hillmar\HILLMAR PRODUCTION\04 THRUSTER DB\0700-4\07004001 TDB-MD\02 SPC-SHT-TDB-MD\89651.idw

Document Template #710-101-62058

** ALL TECHNICAL DATA IS SUBJECT TO CHANGE WITHOUT NOTICE **
Hillmar works have a fully registered ISO 9001-2008 quality assurance programme (QCB #01-1525)