3 THRUSTERS DC

1.0 ESDC Series Thruster Models

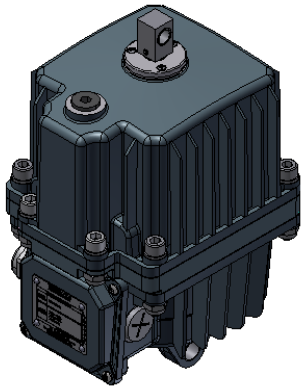

ESDC-023-030-ALL

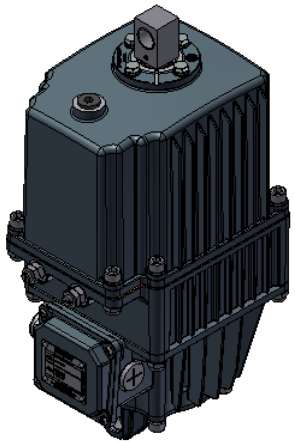

ESDC-050-080-ALL

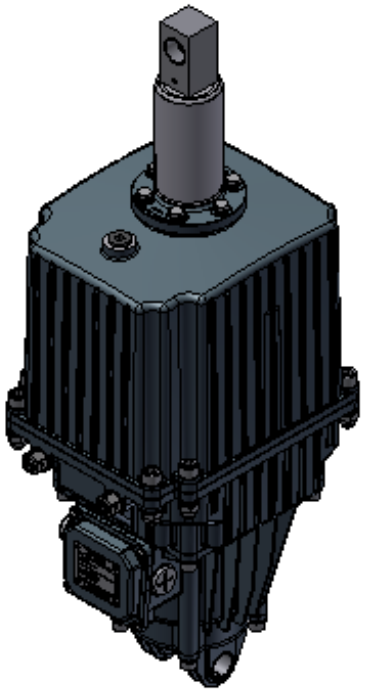

ESDC-121-201-301-ALL

2.0 Principles of Operation

ESDC Series Thruster Capacities

NOMINAL FORCE TABLE

	THRUSTER									
MODEL	ESDC-023	ESDC-030	ESDC-050	ESDC-080	ESDC-121	ESDC-201	ESDC-301	ESDC-121	ESDC-201	ESDC-301
STROKE (mm)	50	50	60	60	60	60	60	120	120	120
NOMINAL FORCE (N)	220	300	500	800	1300	2000	3000	1300	2000	3000
OIL CAPACITY (L)	1.8	1.8	2.9	3	7.9	7.9	7.9	7.9	7.9	7.9

3.0 Principles of Operation

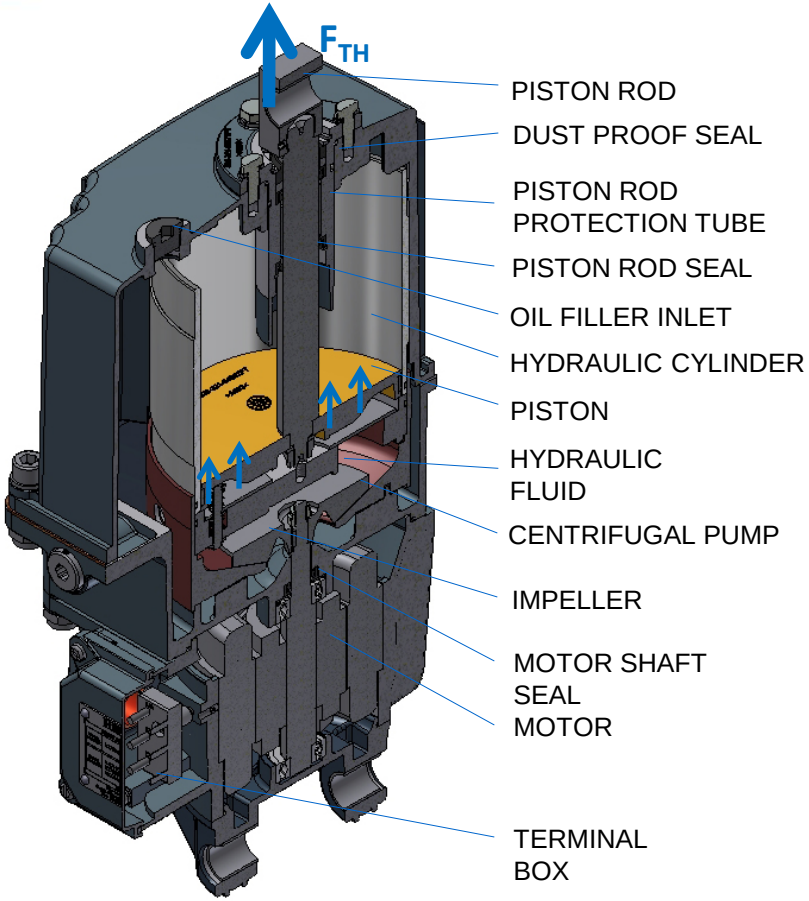

THRUSTER

The motor rotates the impeller (pump) which produces enough thruster force F_{TH} to apply pressure to the piston causing the piston rod to rise.

THRUSTER FORCE CALCULATION

F_{TH} = THRUSTER FORCE

P_{CY} = CYLINDER PRESSURE

A_{CY} = CYLINDER AREA

$F_{TH} = P_{CY} \times A_{CY}$

Each thruster model is provided with a different impeller size designed to produce the specified thruster force. Refer to ESDC Series page for this information.

All thrusters are built to **DIN 15430** Standards, thus are interchangeable with all other thrusters manufactured under this DIN Standards.

4.0 Design Highlights

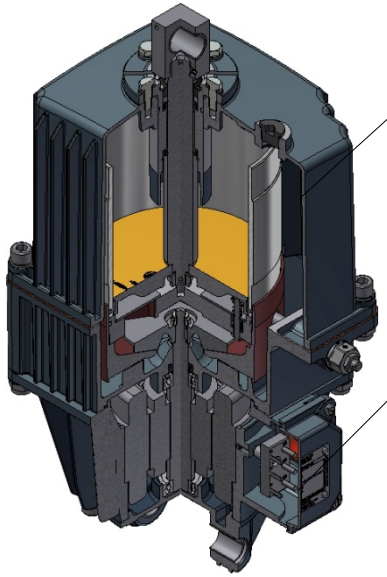

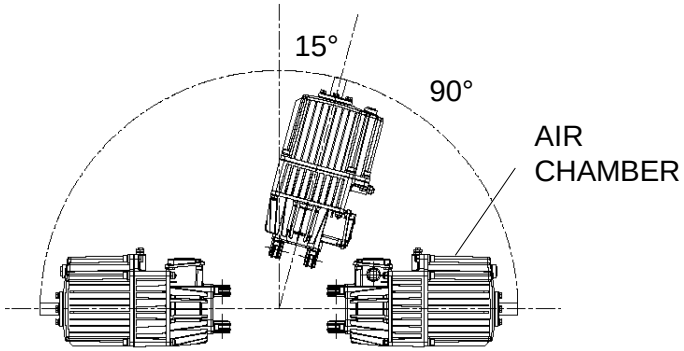

THRUSTER OPERATIONAL POSITIONS

- Thruster body components are made of aluminum alloy.
- Electrical motor is designed and constructed in accordance with UL, CSA & CEI-34/1 Electrical Codes.
- Electrical junction box and motor housing designed for IP65 electrical protection.
- Motor shaft is hardened & ground to ensure long life sealing.
- Thruster comes standard with air chamber which allows horizontal as well as vertical operation.
- All seals & bearings installed on ESDC thruster are certified brand name products.
- All fasteners are made of stainless steel.
- Motor housing can be rotated 90°

5.0 Standard Features

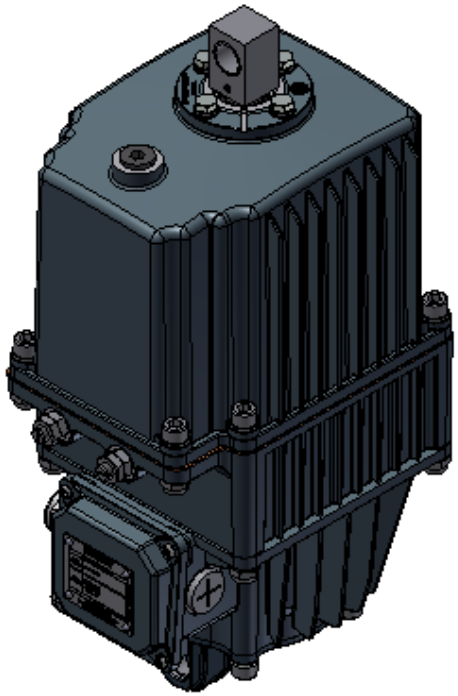

- Each thruster comes complete with performance test certification.
- Designed for continuous operation.

Mounting position

- Vertical with piston rod up.
- Horizontal and intermediate positions with name plate up.

Hydraulic oil

- HL 10 **DIN 51524**, Ambient Temperature range: -25°C to +60°C

Electrical Standards

- Voltages & Frequencies
- 220-500V / 50-60 Hz / 3 phase

Motor

- Asynchronous motor AC 3 phase
- CSA, UL , acc. CEI-34/1
- Insulation class F

Terminal Box

- Terminal Board 9 poles.
- Ground Terminal with live terminal screws
- Cable Gland Entry
- Protection class IP65

6.0 Design Options

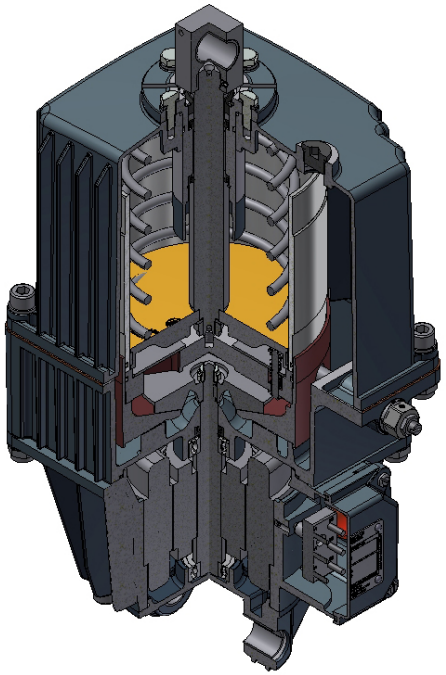

- Arctic Oil
- Springs
- Raising Valve
- Lowering Valve
- Raising & Lowering Valve
- Motor Strip Heater
- Mechanical Switch W/Bracket
- Proxy Switch W/Bracket
- Special Voltage
- High Temperature Oil
- High Temperature such as Hot Metal Crane Application
- Model with Braking Spring

7.0 Standards

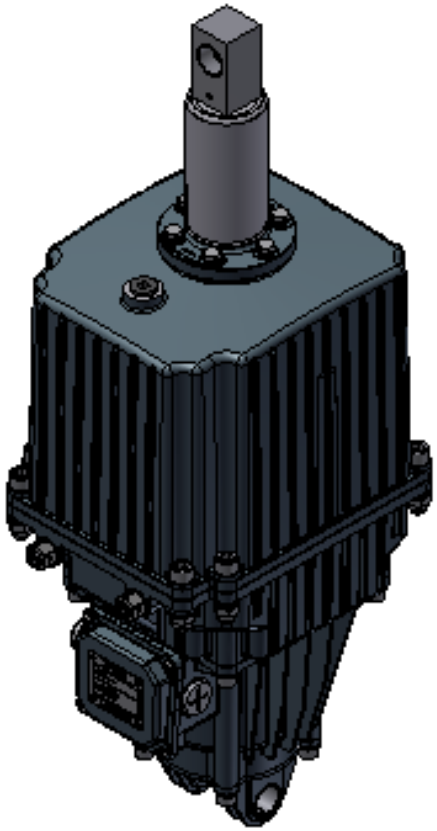

All Hillmar products are designed & manufactured in accordance with the following standards.

7.1 Design standards.
7.2 Performance standards.
7.3 Document standards.
7.4 Production & Quality standards.
7.5 Packaging standards.

All Hillmar products are delivered with Hillmar commitment to customer satisfaction.

All Hillmar products manufactured in accordance with DIN 10204-2.1

Hillmar is an ISO 9001:2008 certified company.